IDWAL

TECHNICAL GUIDE

Design and Construction

Idwal 2021

Contents

Has the vessel been built to the standards and Rules of an IACS-member Class Society? 4
Under what IACS Class society supervision was the vessel built? 4
Did the vessel provide Ultrasonic Thickness Measurement (UTM) reports? 5
Did the UTM report show any diminution of steelwork? 6
Please select if the vessel is fitted with any of the following features: 6
- Hull & Structure 6
- Wind Assistance 8
- Pre-swirl device e.g. Mewis Duct 9
- Post-swirl device e.g. Boss Cap fins 10
- X-Bow 10
- Stabiliser Fins 11
- New Panama mooring fixtures 11
- Deck Stress Monitors 12
- Vibration Compensation 13
- Chart sized ECDIS / ECDIS planning table 14
- Integrated Bridge system 14
- Wave RADAR 15
- Solid-state RADARs 15
- K-Band RADAR 15
- 3rd Gyro Compass / Laser ring Compass 15
- Machinery Space Control System repeater panel 16
- Head-Up-Display (HUD) / Augmented Reality (AG) unit 16
- Differential-GPS 17
- Internal and External CCTV system 17
- Shoreside live monitoring of equipment and machinery 18
- Additional automation systems 18
- Engine Room & Firefighting 18
- Fuel emulsion and improvement technology 19

Exhaust Gas recirculation....19
Dual-fuel engines....20
Additional Auxiliary Equipment for increased redundancy E.g. Additional pumps....20
Inverter drives for pumps and fan motors....20
MGO Cooler....21
Engine Power Limiter (EPL)....22
Optimized fuel economy device (E.g. Leanmarine)....22
High Voltage (>1000V) Systems....23
Incinerator sludge burning system....24
UMS Capabilities (regardless of Class notation)....24
2-stroke engine Mechanical Lubricator e.g. Alpha-Lubricator....25
Centralised Sea Water cooling....25
Sea Water Box coolers....26
Cold Ironing / Shore Power facilities....26
Dual Air Handling Unit Refrigeration compressors....27

IACS – Member Class Society

Has the vessel been built to the standards and Rules of an IACS-member Class Society?

IACS refers to the International Association of Classification Societies which, at the time of writing, consists of the following 12-member Classification Societies:

- American Bureau of Shipping (ABS)
- Bureau Veritas (BV)
- China Classification Society (CCS)
- Croatian Register of Shipping (CRS)
- Det Norske Vertitas (DNV) (Includes Germanischer Lloyd (GL) who merged with DNV in 2013 to form DNV-GL. DNV-GL was rebranded to DNV in 2021)
- Indian Register of Shipping (IRS)
- Korean Register of Shipping (KR)
- Lloyd's Register of Shipping (LR)
- Nippon Kaiji Kyokai (Class NK)
- Polish Register of Shipping (PRS)
- Registro Italiano Navale (RINA)
- Russian Maritime Register of Shipping (RS)

A vessel has been built to the standards of one of these Classification Societies if they are assigned a specific Class notation that states the standard is in line with their requirements. The Class notations vary from Class to Class and can be searched for online. The Class notations are usually stated on the Class Certificate or on the Class status report.

Under what IACS Class society supervision was the vessel built?

The Class notations are usually stated on the Class Certificate or on the Class status report. These notations are the symbols that signify the standards to which the ship is built. Each classification society has developed its own notations, but the notations are published on the websites of each classification society. It is easy to find the symbols and abbreviations used to confirm that the vessel was built under the supervision of the vessel's current classification society or to the standards and rules of another IACS classification society. Some classification societies note the vessel's previous classification society on the class status.

The vessel's Class history can be found in the "Electronic Quality Shipping Information System" which is free to access and can be accessed through the following link.

http://www.equasis.org/EquasisWeb/public/Activation?p_email=stephen.grist%40idwalmarine.com&p_cle=243A7B822C0F

Ultrasonic Thickness Measurement (UTM) reports

Did the vessel provide Ultrasonic Thickness Measurement (UTM) reports?

The IACS minimum requirements for UTM measurements at Special Surveys are provided below. The UTM report is very important, as diminution of steel is probably the biggest risk factor for owners and technical managers and steel renewals are one of the most significant CAPEX costs. Note that there are no requirements for vessels less than 10 years old to have UTMs unless suspect areas have been identified. It should also be noted that there are additional UTM requirements for vessels on the Enhanced Survey programme (ESP):

Special Survey No.1 Age ≤ 5	Special Survey No.2 5 < Age ≤ 10	Special Survey No.3 10 < Age ≤ 15	Special Survey No.4 and Subsequent 15 < Age
1) Suspect areas throughout the vessel.	1) Suspect areas throughout the vessel.	1) Suspect areas throughout the vessel.	1) Suspect areas throughout the vessel.
	2) One transverse section of deck plating in way of a cargo space within the amidships 0.5L	2) Two transverse sections within the amidships 0.5L in way of two different cargo spaces.	2) A minimum of three transverse sections in way of cargo spaces within the amidships 0.5L.
		3) All cargo hold hatch covers and coamings (plating and stiffeners).	3) All cargo hold hatch covers and coamings (plating and stiffeners).
		4) Internals in forepeak and afterpeak ballast tanks.	4) Internals in forepeak and afterpeak ballast tanks.
			5) All exposed main deck plating full length.
			6) Representative exposed superstructure deck plating((poop, bridge, and forecastle deck).
			7) Lowest strake and strakes in way of 'tween decks of all transverse bulkheads in cargo spaces together with internals in way.
			8) All wind – and water strakes, port and starboard, full length.
			9) All keel plates full length. Also, additional bottom plates in way of cofferdams, machinery space, and aft end of tanks.

☎ +44 (0)2920 446 644 | +86 21 6219 5047 enquiries@idwalmarine.com

Different classification societies report UTM in different formats. Please see an example of an unfilled page from a UTM report

TM1-G **Report on THICKNESS MEASUREMENT of ALL DECK PLATING, ALL BOTTOM SHELL PLATING or SIDE SHELL PLATING*** (* - delete as appropriate) **Sheet 4**

Ship's name..... Class Identity No. ..... Report No. .....

STRAKE POSITION																	
PLATE POSITION	No. or Letter	Org. Thk. mm	Forward Reading						Aft Reading						Mean Diminution %		Maximum Allowable Diminution
			Gauged		Diminution P		Diminution S		Gauged		Diminution P		Diminution S				
			P	S	mm	%	mm	%	P	S	mm	%	mm	%	P	S	mm
12th forward																	
11th																	
10th																	
9th																	
8th																	
7th																	
6th																	
5th																	
4th																	
3rd																	
2nd																	
1st																	
Amidships																	
1st aft																	
2nd																	
3rd																	
4th																	
5th																	
6th																	
7th																	
8th																	
9th																	
10th																	
11th																	
12th																	

Operators Signature..... NOTES – See Reverse

Did the UTM report show any diminution of steelwork?

UTM reports are usually very lengthy and sometimes the report is only available as a hard copy onboard. A review of the UTM report should be conducted and a summary provided of any suspect areas as well as the general level of diminution recorded. There is no requirement to perform and in-depth analysis of the UTM report, only a cursory check of the summary page of any areas of excessive diminution.

Vessel Features

Please select if the vessel is fitted with any of the following features:

Hull & Structure

- *Air bubbler / Hull air lubrication*

Air Lubrication System is a method to reduce the resistance between the ship's hull and seawater using air bubbles. The air bubble distribution across the hull surface reduces the resistance working on the ship's hull, creating energy-saving effects. With the right ship hull design, the air lubrication system is expected to achieve up to 10-15% reduction of CO2 emissions, along with significant savings of fuel.

Some examples of alternative names for Hull Air Lubrication systems are provided below:

- Bubble Drag Reduction (BDR)
- Air Layer Drag Reduction (ALDR)
- Partial Cavity Drag Reduction (PCDR)
- Winged Air Inject Pipe (WAIP)
- Air Chamber Energy Savings (ACES)
- Air Cavity Ships (ACS)

Examples of current systems on the market at the time of writing are provided below:

- Mitsubishi Air Lubrication (MALS)
- R&D Engineering - Winged Air Induction Pipe System (WAIP)
- Samsung Heavy Industries SAVER System (SAVER Air)
- Silverstream System
- Foreship Air Lubrication System (Foreship ALS)
- Damen's Air Chamber Energy Saving (ACES) System
- Skin Friction Reduction (SFR)

Air lubrication systems generally consist of piping, pneumatic and control systems, and air dispensers. The most obvious and identifiable aspect of the system is a blower or compressor and control panel which is often located at the forward end of the vessel or in the machinery space.

It is also possible to see the bulb if pictures are provided from the last Dry Dock or if the vessel is in Dry Dock at the time of inspection

Wind Assistance

Wind assisted propulsion is the practice of decreasing the fuel consumption of a merchant vessel using sails or some other wind capture device. A wind-assisted propulsion system will usually be obvious, as a device will be fitted to the vessel's deck which enables the conversion of kinetic energy of wind into thrust for a ship. Wind assistance fittings are often retraceable, though fittings should be clearly identifiable on the plans for the vessel. Examples of wind assistance systems are provided below:

- Wingsail
- Kite Sail
- Flettner rotor

Pre-swirl device e.g. Mewis Duct

Propulsion improving devices (PIDs) or energy saving devices (ESDs) are different ducts, pre-swirl fins or other modifications made to the hull or propeller to improve efficiency. Depending on the device, the main goal for these devices is to reduce the fuel consumption by improving the flow around the hull or propeller. Note that pre-swirl devices are devices fitted in front of the propeller. The most obvious way to check that a vessel has a pre-swirl is through a review of the ships plans (See Below).

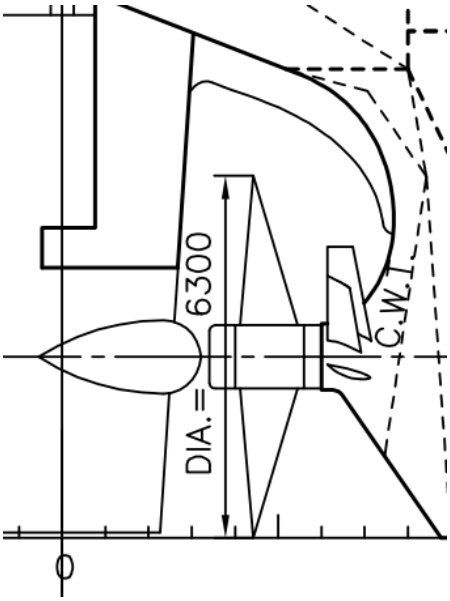

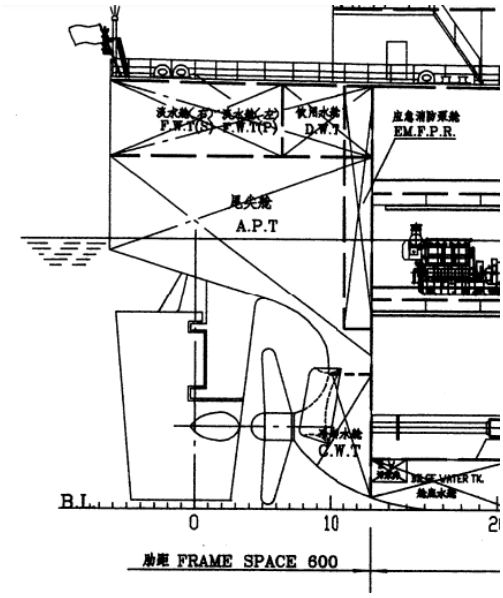

It is also possible to see the pre-swirl if pictures are provided from the last Dry Dock or if the vessel is in Dry Dock at the time of inspection.

Post-swirl device e.g. Boss Cap fins

Propulsion improving devices (PIDs) or energy saving devices (ESDs) are different ducts, caps, contra-rotating propeller (CRP) or other modifications made to the hull or propeller in order to improve efficiency. Depending on the device, the main goal for these devices is to reduce the fuel consumption by improving the flow around the hull or propeller. Note that post-swirl devices are devices fitted behind the propeller. The most obvious way to check that a vessel has a pre-swirl is through a review of the ships plans.

It is also possible to see the post-swirl if pictures are provided from the last Dry Dock or if the vessel is in Dry Dock at the time of inspection

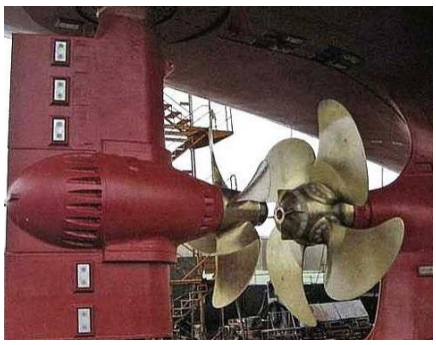

X-Bow

In ship design, an inverted bow (occasionally also referred to as reverse bow) is a ship's or large boat's bow whose farthest forward point is not at the top. Inverted bows maximize the length of waterline and hence the hull speed and have often better hydrodynamic drag than ordinary bows. An X-Bow or inverted bow should be easily identifiable visually.

Stabiliser Fins

Ship stabilizers (or stabilisers) are fins or rotors mounted beneath the waterline and emerging laterally from the hull to reduce a ship's roll due to wind or waves. Active fins are controlled by a gyroscopic control system. When the gyroscope senses the ship roll, it changes the fins' angle of attack to exert force to counteract the roll. Fixed fins and bilge keels do not move; they reduce roll by hydrodynamic drag exerted when the ship rolls. It should be noted that as fins create drag and energy efficiency reductions, many owners have decommissioned them so it should be verified that the fins are still in use and regularly tested. Stabilizer fins are retracted when the vessel is alongside. Fins are usually controlled from a remote panel on the bridge or Engine Control Room. Stabilizer fins will usually be clearly identifiable on the ships plans.

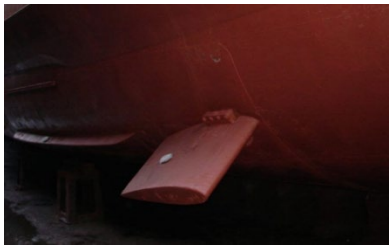

New Panama mooring fixtures

The Panama Canal authority regularly issues Notices to Shipping with requirements for Panama Canal transit. Vessels are generally designed and constructed with these rules in mind and thus newly designed ships are generally constructed to follow the Panama Canal rules in place at the time of instruction. However, vessels with a length of more than 294.13m or breadth of more than 32.31m or smaller vessels with a maximum draught of up to 15.2m intending to transit the Panama Canal through the new extended locks (Neopanamax Locks) were generally not designed with mooring fittings in compliance with the new Panama Canal Rules and as such require mooring fittings retrofitted so that they can transmit the new Panama Canal locks. This can be a costly exercise and owners are keen to verify that a vessel has the additional mooring fittings required for a vessel to transit the Neopanamax Locks.

For Panamax vessels of 30.48 meters (100 feet) in beam, or more, that comply with the size and draft limitations of the Panamax locks; namely, 294.13 meters (965 feet) in length by 32.31 meters (106 feet) in beam by 12.04 meters (39.50 feet), TFW draft, the rules remain unchanged.

The requirements for new panama mooring fittings is only likely to effect vessel's intending to be considered as Panamax Plus and Neopanamax vessels (All Panamax vessels authorized for TFW drafts greater than 12.04 meters (39.50 feet) up to 15.24 meters (50.00 feet) and approved for transit of the new locks).

Vessel's greater than the Neopanamax restrictions (Length of 366m, Beam of 51.25m and a maximum draught of 15.2m) will not need any modifications as they cannot transit the new locks regardless of their mooring fittings.

Find a summary below of the Mooring arrangement requirements for Panama-Canal transit according to ACP notice N-1-2016.

Mooring arrangement requirements for Panama-Canal transit acc. to ACP notice N-1-2016

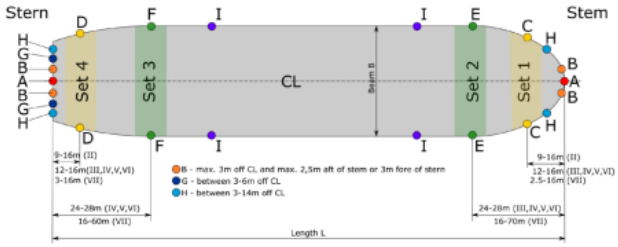

Range	Required chocks for vessels of	A or B		C	D	E	F	G	H	I
I	L < 60.96m & Beam < 15.24m	d	s							
II	60,96m < L < 121.92m & B < 22.86m	d	s	s	s					
III	121,92m < L < 173.74m & B < 22.86m	d	s	d	s	s				
IV	173,74m < L < 274,32m & B > 22.86m	d	d	d	d	s	s			
V	274,32m < L < 294.13m & B < 32.31m	d	d	d	d[1]	s	s			
VI	Add. to above for B > 27.73m							s		
VII	L > 294.13m or B > 32.31m	d	d	d	d[1]	d[2]	d[2]		d[2]	d[2,3]

d = double chock with min. SWL 64t
s = single chock with min. SWL 45.36t

[1] Min. 13m above max. Panama Fresh water draft
[2] Min. SWL 90t
[3] Additional closed chocks / recessed bits for vessels with large bow flare, pronounced counters or unusually high freeboard

A to be accompanied by two pairs of heavy bitts
B to be accompanied by one pair of heavy bitts for each chock (double bollards) with min. SWL 64t

C D E F H & d
to be accompanied by one pair of heavy bitts (double bollard) with min. SWL 64t or 90t respectively

C D E F G & s
to be accompanied each by one bitt (single bollard) with min. SWL 45.36t

The most obvious way to verify compliance is to be familiar with the requirements so that the mooring fittings required can be easily identified on the mooring decks. Essentially, the chocks and accompanying heavy bitts intended for towing vessels permitted to transit the new locks should be delivered with an increased safe working load (SWL) of 90t (883kN). Of course, the local supporting structures for these fittings must be designed to transfer the respective design load. Some vessels have been issued with certificates from the Flag authority or the Panama Canal authority which testify that the mooring fittings are following the rules. We recommend taking an overview photo of the mooring decks so that owners can verify compliance if it is not possible to verify compliance onboard

Deck Stress Monitors

Some large tankers, bulk carriers, or container vessels, where the hull girder stiffness is relatively low compared to their size, need hull monitoring systems to measure the forces, motions and resulting stresses caused by the sea state. The system includes various sensors, such as long-base strain gauges, rosette gauges and trio-axial accelerometers to monitor hull girder deck stresses and localised stresses on bulkheads, side shell, cross-deck strip, and double bottom structure. Real-time data from these sensors is provided for immediate use and for the evaluation of the course and/or speed changes. The system allows Hull structural integrity to be continuously monitored and displayed, with advanced algorithms enabling predictions of hull status and deterioration to be determined. Other information such as speed, course and met

ocean data can be integrated with the standard package, giving increased safety and operational efficiency.

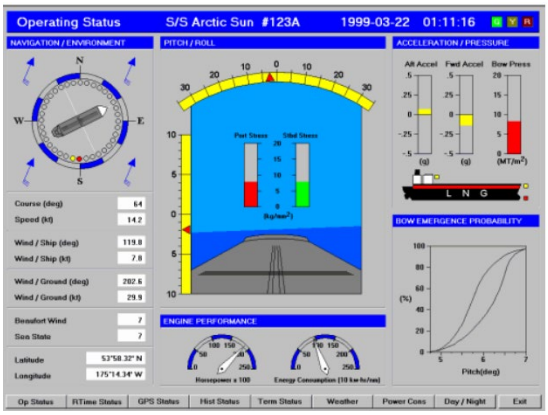

It is difficult to identify these sensors, therefore the main way of identifying that a vessel is fitted with deck stress monitors would be to ask the crew who should be able to demonstrate and show the monitor display for the system which may be a standalone display or integrated into the ships computer system.

Vibration Compensation

Vibration is generally not subject to mandatory classification rules, except for the propeller shaft where excessive vibration can cause failure that would compromise the safety of a ship by loss of propulsion. However, classification societies do have optional class notations in relation to vibration and noise standards for habitability. The International Standards Organisation (ISO) also publishes standards. An owner usually specifies such criteria in the build contract, which are normally derived from ISO or a class notation that are regrading measured values

While vibrations are generally a function of the vessel's design and machinery, some vessels can be fitted with vibration compensation fittings to reduce vibrations in areas of the vessel to reduce the risk of failure in machinery, components and structures onboard ships, caused by excessive vibration and improve habitability of accommodation areas. Ships that have vibration compensation fittings and installations will generally have a Class notations reflecting that the vessel meets minimum standards for vibration control onboard.

Bridge and Communication

Chart sized ECDIS / ECDIS planning table

Refers to vessel's fitted with large chart table sized ECDIS units. This should be easily identifiable on the bridge.

Integrated Bridge system

An **integrated bridge system (IBS)** is defined as a combination of systems which are interconnected in order to allow centralized access to sensor information or command/control from workstations, with the aim of increasing safe and efficient ship's management by suitably qualified personnel.

The IBS usually consists of:

- Autopilot
- Radar/ ARPA
- Gyro
- Position fixing systems
- ECDIS
- Conning Display
- Power distribution system
- Steering gear
- GMDSS

☎ +44 (0)2920 446 644 | +86 21 6219 5047 enquiries@idwalmarine.com

An integrated bridge system should not be confused with an integrated Navigation System (INS) which only combines navigation functions and not things such as the conning display. The most obvious feature of an integrated bridge system is that navigational equipment displays can be pulled up on different displays. Many different manufacturers have developed integrated bridge systems:

- Konsburg- K-Bridge.
- Sperry marine-Visonmaster.
- Wärtsilä -3C
- Tokyo Keiki0 IBS-100
- *3rd Independent ECDIS*

Where 3 independent EDCIS units are fitted, care should be taken that these are truly independent with independent power sources. Some ships will have repeater screens if for instance there is an aft facing console and thus one of the units will simply be a repeater display drawing from another ECDIS C.P.U. The Bridge equipment inventory should list the ECDIS units onboard.

Wave RADAR

RADAR used solely for the detection of sea waves which may be used to supply data for fuel optimization programmes or for efficient Passage Planning.

Solid-state RADARs

Instead of a magnetron, the RADAR uses a solid-state broadband transmitter. The easiest way to determine if a ship is SSD, is to check the model number or to check if the RADAR system requires a magnetron.

K-Band RADAR

K-band RADARS operate with frequencies between 18 GHz and 27 GHz and will detect smaller objects than an S or X band RADAR. The bridge equipment inventory should state if a RADAR is a K-band unit.

3rd Gyro Compass / Laser ring Compass

Laser ring compasses (fiber optic) rely on light rather than inertia like traditional gyro compasses. Laser ring (fiber optic) compasses will be smaller, with fewer mechanical parts. The model number of the Gyro should be checked. Fiber optic compass units are considerably smaller than tradition Gyro compasses and require less frequent servicing.

☎ +44 (0)2920 446 644 | +86 21 6219 5047 enquiries@idwalmarine.com

The number and type of Gyro compasses installed should be checked on the bridge inventory list. Please do not confuse Gyro compass repeaters with Gyro compass units. This question only relates to the number and type of the Gyro compasses fitted and does not concern repeater units which simply repeat the main gyro units.

Machinery Space Control System repeater panel

Can be used to control machinery systems onboard including the Ballast System and other machinery systems. Please note that repeater panels should not be considered. This question only relates to panels which make it possible to physically control Engine Room machinery from the bridge.

Head-Up-Display (HUD) / Augmented Reality (AG) unit

A video feed from a forward pointing camera is overlaid with navigational information. Though currently rare, such systems have been developed and installed on merchant vessels. The system generally consists of a processor unit, IP camera, PoE adapter, trackball, and mouse, ENC dongle and other installation equipment.

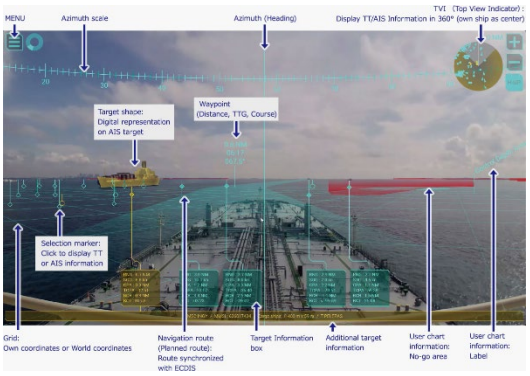

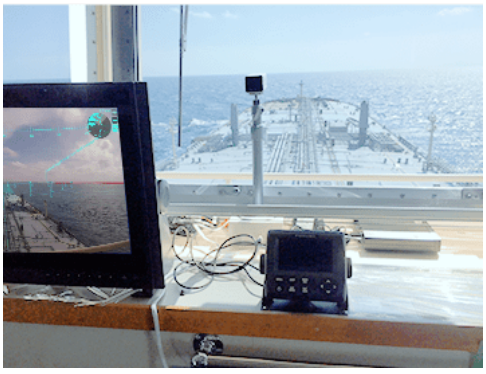

Head-Up-Display (HUD) / Augmented Reality (AG) units should be easily identifiable on the bridge and should be listed on the bridge equipment list.

- *Enclosed Bridge Wings*

Bridge wings are fully enclosed.

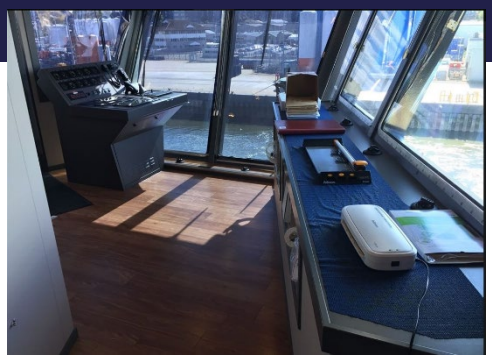

Differential-GPS

A Differential Global Positioning System (DGPS) is an enhancement to the Global Positioning System (GPS) which provides improved location accuracy.

Each DGPS uses a network of fixed ground-based reference stations to broadcast the difference between the positions indicated by the GPS satellite system and known fixed positions. These stations broadcast the difference between the measured satellite pseudo ranges and actual (internally computed) pseudo ranges, and receiver stations may correct their pseudo ranges by the same amount. The digital correction signal is typically broadcast locally over ground-based transmitters of shorter range.

Most modern vessel's will be fitted with DGPS units. The model number of the GPS units onboard should be checked on the inventory and it should be cross-checked that they are DGPS units.

Internal and External CCTV system

CCTV stands for closed-circuit television and is commonly known as video surveillance. If CCTV is fitted, the CCTV recordings should be visible on displays on the bridge or in the Engine Room. The number of cameras installed should be recorded and it should be verified that all cameras are operational.

Shoreside live monitoring of equipment and machinery

Systems that allow critical equipment and machinery data to be transmitted ashore so that vessel managers can monitor operations in real time. Such systems are becoming increasingly common particularly on Cruise vessels. The only way of determining if a vessel is fitted with such capabilities would be to ask the crew.

Additional automation systems

Please list here any other automated systems onboard including Dynamic Positioning (DP) systems.

Engine Room & Firefighting

- *Fuel Mass Flowmeters*

Accurate measurement of large quantities of bunker fuels received and used by ships around the world has historically been difficult, with many ships relying on outdated methods of verification, such as before-and-after manual measurement of fuel tank levels. The potential for inaccuracies is significant and can result in disputes between the fuel supplier and the ship and charterers.

Accurate measurement of bunker fuel receipt quantities and fuel consumption using mass flow meters will result in greater efficiencies in the ship bunkering process and more accurate OPEX predictions and reduce disputes.

Most fuel measurement systems primary consists of a Control Unit (HOMIP) and mass flow meters operating on the “Coriolis principle”.

The crew onboard should be aware if mass flowmeters are installed as they will be regularly used. Flowmeters will also need to be regularly calibrated so calibration certificates should be available onboard. Flowmeters will usually be located on deck or in the engine room and should be easily identifiable.

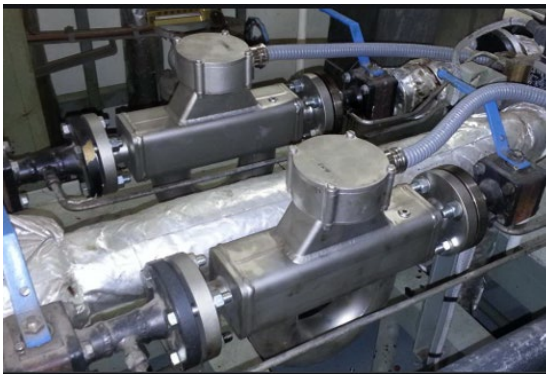

Fuel emulsion and improvement technology

Fuel Oil Emulsion Technology (FOE) for ships allows for the "dilution" of HFO with water to form a stable fuel oil emulsion (FOE), which has the following operational advantages:

- Offers efficiency improvements
- Simultaneously reduces NOx and PM emissions
- Better combustion and improved carbon efficiencies
- Reduces maintenance costs and downtime because of FOE's "cleaner" combustion characteristics

A vessel using FOE technology will need to be fitted with an emulsifier system for mixing water, fuel and emulsifier. Once both emulsifier and water are added to the fuel, the mixture is passed through a homogenizer. The homogenizer is generally comprised of a conical shaped stator-rotor with a low clearance and a grinding profile which helps to reduce the droplet size of the water droplets. The crew will be aware if FOE technology is fitted onboard and it might be noted on the supplement to the IAPP.

Exhaust Gas recirculation

Exhaust gas recirculation is a method of modifying the inlet air to reduce NOx emissions at the source. Recirculation of about 30% of the exhaust gas increases the heat capacity and lowers the oxygen content during combustion, which in turn reduces the flame peak temperature thereby minimizes NOx formation.

To prevent engine damage from sulphur and soot when recirculating the exhaust gas, the gas is cooled in a scrubber using wash water. The wash water must be cleaned in a water treatment system to meet IMO requirements for overboard discharge.

Whereas engine modifications and operational set-up can be used to achieve Tier I and Tier II, exhaust after treatment in the form of Selective Catalytic Reduction (SCR) or as part of an Exhaust Gas Recirculation (EGR) system is required for Tier III.

Unlike SCR equipment, which is installed after the engine, EGR equipment is integrated with the engine. EGR integration should be easily identifiable when inspecting an engine as the EGR scrubber is usually easily identifiable.

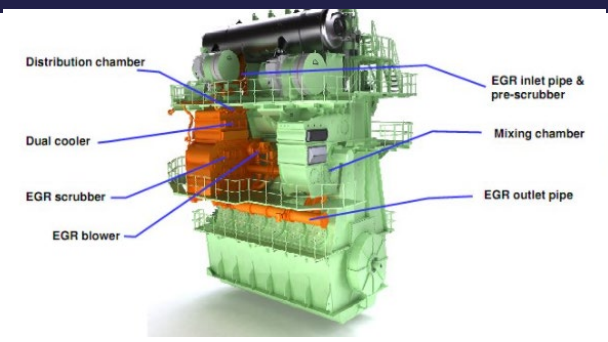

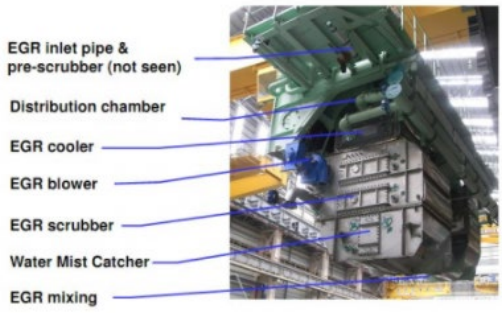

If on the IAPP supplement the engines are listed as NOx ref. in the method of compliance should be determined, as it is important for clients to know if Selective Catalytic Reduction (SCR) or Exhaust Gas Recirculation (EGR) is in use.

Dual-fuel engines

A dual fuel engine converts diesel or natural gas efficiently and can switch from one fuel to another without any fluctuations in speed or output.

The main advantage of dual fuel technology is fuel flexibility. This makes it possible to take advantage of the low cost and superior environmental benefits offered by gas. If the supply of gas fuel is interrupted, the engine can continue operating using liquid fuel. In addition to natural gas, some dual fuel engines can also run on liquid biofuel or distillates like marine diesel oil (MDO), marine gas oil (MGO), crude oil and heavy fuel oil (HFO).

The most obvious way to determine if a vessel's engines are dual fuel is to verify the model number on the IAPP supplement and check to see if it is a duel fuel model. Furthermore, the vessel may have different fuel systems and storage tanks for the different fuels in use, though a vessel may be fitted with a dual fuel engine but only operate with a single fuel.

Additional Auxiliary Equipment for increased redundancy E.g. Additional pumps

Any Auxiliary equipment that is provided in addition to the minimum requirements should be identified and noted. Please do not note equipment that is required as additional equipment. For example, a vessel may have two sea water cooling pumps but as it is required to have two the second pump is not considered as an additional piece of equipment.

Inverter drives for pumps and fan motors

Variable speed electric propulsion motors are operated from a variable frequency drive (VFD), which supplies power to motors at a frequency appropriate to the desired speed. Variable-frequency-drive (VFD) applications are gradually being recognized by maritime industries as one of the most effective tools for energy savings. VFD-driven central seawater cooling systems can

provide significant energy benefits because the ambient seawater temperature varies greatly as ships travel through different sea areas and thus cooling water doesn't need to be provided at a constant rate as is generally the case with conventional cooling pumps without inverter drives.

Inverter drives are generally easily identifiable and might be listed on the machinery equipment list. The crew should also be able to identify inverter drives and should know if they are fitted onboard their vessel's.

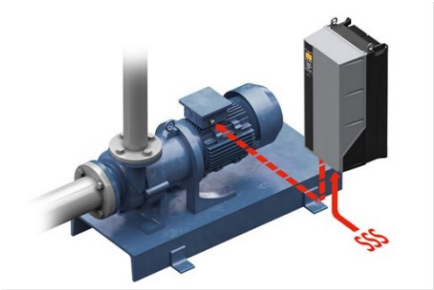

MGO Cooler

The MGO Cooler has been developed in response to the MARPOL sulphur emission regulations.

The refinery process to remove sulphur impacts viscosity and, consequently, lubricity. Operating low viscosity, poor lubricating MGO could cause damage in the engine fuel pump which is designed for high viscosity fuel (HFO) operation.

In order to provide proper film-forming properties to protect pump moving parts from wear, engine manufactures advice to keep a minimum fuel viscosity of 2cSt at the fuel pump inlet. To ensure doubtless operation at start and stop of engines, a viscosity level over 3 cSt is strongly recommended. The viscosity of the fuel can be altered by heating or cooling it and thus a means of heating fuel and cooling it is required.

An MGO Cooler should be easily identifiable during an inspection of the machinery spaces of a vessel. It should also be noted on the machinery list provided by the crew

Engine Power Limiter (EPL)

EPL is likely to be the easiest way for older ships to meet EEXI requirements because it requires minimal changes to the ship and does not change the underlying performance of the engine. EPL establishes a semi-permanent, overridable limit on a ship's maximum power and therefore speed. For mechanically controlled engines, this would take the form of a mechanical stop screw sealed by a wire placed on the governor speed stopper that limits the amount of fuel that can enter an engine. For newer, electronically controlled engines, EPL would be applied via a password-protected software patch. The EPL would be overridable if a ship is operating under adverse weather conditions and requires extra engine power.

Before an EPL is put in place, Class should be informed, and many Class societies note EPL arrangements on the Class status reports for vessels as memoranda or notes. The crew onboard should be aware if EPL arrangements are installed. It may also be possible to see evidence of the EPL during the visual inspection of the main engine. For MAN B&W MC/MC-C engines the following items are required:

For MAN B&W ME/ME-C/ME-B engines the following work is required:

1. Changing the setting of Engine Max Load or Chief Index Limit.

Optimized fuel economy device (E.g. Leanmarine)

This refers to automated tools which are used to manage fuel consumption. Numerous Hardware and Software based devices are available on the market. For example, "Leanmarine FuelOpt" is a hardware device which runs on the ship's bridge, adjusting the speed of the vessel to ensure that it does not go higher than a maximum fuel consumption per day. If a system is

fitted, a panel will be fitted in the E.R. or on the bridge. Systems may also be provided in the form of software calculators which could be installed on normal PC hardware.

The crew onboard vessels should be aware if fuel economy devices are fitted as they will usually be using such devices during normal operations. Repeater panels for systems should also be easily identifiable in Engine Control Rooms or on the bridge.

High Voltage (>1000V) Systems

The voltages used on board a ship is conventionally a 3phase, 60Hz, 440 Volts supply being generated and distributed. Any Voltage used on board a ship if less than 1kV (1000 V) is called a LV (Low Voltage) system and any voltage above 1kV is termed as High Voltage. There are various advantages to using high voltage systems onboard merchant vessels and high voltage systems can often be found on passenger ships. A High Voltage (over 1000V) system is where voltage is generated and distributed at high voltage or transformed to and distributed at high voltage. It does not include systems where high voltage is utilised locally e.g. ignition systems, radio transmission, radar and other navigational equipment.

It is usually easy to identify if a vessel has a high voltage system. Firstly, a 1000v switchboard will be provided usually in the Engine Control Room which should be easily identifiable. Furthermore, the crew onboard should be aware if the vessel has high voltage systems, as the 2010 Manila Amendments to the STCW Code brought in requirements for engineers to undergo education and training in High Voltage systems, at both the operational and management levels in order to serve on vessels with high voltage systems.

Incinerator sludge burning system

While many vessels are fitted with incinerators, not all vessels are fitted with incinerators capable of incinerating oil residues (Sludge). The most obvious way to check if a vessel's Incinerator can burn sludge is on the Supplement to the International Oil Pollution Prevention Certificate (Form A) under section 3.2. which details the means for the disposal of oil residues (sludge) onboard a merchant vessel

3.2 Means for the disposal of oil residues (sludge) retained in oil residue (sludge) tanks:	
3.2.1 Incinerator for oil residues (sludge)	X
3.2.2 Auxiliary boiler suitable for burning oil residues (sludge)	–
3.2.3 Other acceptable means, state which Incinerator Waste Oil Tank Provided with heating coils to evaporate water in oil residues(sludge)	X

UMS Capabilities (regardless of Class notation)

UMS is an acronym for "Unmanned Machinery Spaces" which means a vessel has automated systems that allow the machinery spaces to be operated unmanned. The most obvious way to determine if a vessel is capable of operating with UMS is via the ships Class Notations and Class Status, however, as Class are required to regularly survey a vessel's UMS capabilities, and as all notations carry a fee, some owners who choose not to operate their vessels with UMS do not pay for their vessels to maintain their UMS notations. It is therefore possible that some vessels may not have UMS Class notations but may be capable of operating with UMS subject to a Class survey.

To operate with UMS, a vessel must fulfill the requirements of SOLAS chapter II-1 Part E regulations 46 to 54. The SOLAS requirements for UMS provide specific regulatory requirements for Fire protection, Protection against Flooding, Control of Propulsion Machinery from the Navigation Bridge, Communication, Alarm Systems, Safety Systems, Special Requirements for

Machinery, Boiler and Electrical Installations as well as some additional Special Consideration in Respect of Passenger Ships.

As mentioned above, a vessel may fulfil the requirements of SOLAS chapter II-1 Part E regulations 46 to 54 but may not have a Class notation as the owners may have chosen to operate the vessel with a constant engine room watch and thus have allowed the surveys required to maintain a UMS to expire. The most obvious way to determine if a vessel was built to comply with SOLAS chapter II-1 Part E regulations 46 to 54 would be to check the design notations on the original G.A., Capacity or Safety Plans. Another option is to physically check for UMS installations such as alarm repeater panels in the engine staff's cabins or an Engine room watch alarm which would both indicate that the vessel was built to comply with UMS requirements and has UMS capabilities despite the overdue required surveys and lack of notation.

2-stroke engine Mechanical Lubricator e.g. Alpha-Lubricator

Large slow-speed diesel engines are provided with a separate lubrication for the cylinder liners. Oil is injected between the liner and the piston by mechanical lubricators' which supply their individual cylinder.

On older engines, cylinder lubrication was provided at a constant rate based on Timed Lubrication (MAN B&W & MHI) and on Accumulator Lubrication (Wärtsilä [Sulzer]) respectively. These older systems are less efficient and use more Lubrication Oil than is required.

Modern engines may operate in ACC-mode (Adaptive Cylinder oil Control) which adapts the lubricating oil feed rate to the fuel oil sulphur content and the engine load. The ACC-mode has been the standard on MAN B&W two-stroke engines since 2004 and is generally considered advantageous as it reduces overall cylinder oil consumption. Different engine manufacturers have developed different systems for Adaptive Cylinder oil Control, with MAN B&W using “Alpha-Lubricators”. This question relates to wheatear a vessel’s 2-stroke engine is fitted with Adaptive Cylinder oil Control.

The most obvious way to see if a vessel’s engine is fitted with Adaptive Cylinder oil Control would be to check the Main Engine manual or to check with the crew. It may also be possible to check the system in use on M.E. performance reports or maintenance records which may detail the overhaul status of of the cylinder lubrication system and the lubrication setting. It should also be evident during a physical inspection of the M.E., what system is in use. A Man B&W engine Alpha-lubrication system consists of a pump station, lubricator unit, Alpha Lubricator Control Unit (ALCU), Load transmitter, trigger unit, back up trigger system and Human Machine Interface (HMI).

Centralised Sea Water cooling

Most cooling systems onboard modern merchant vessels are made as central cooling ones, which means that there is only one or two large plate heat exchangers equipped with titanium plates.

The typical central cooling water system consists of:

- the Seawater Cooling System,
- the Freshwater Low Temperature (FW-LT) System,
- the Freshwater High Temperature (FW-HT) System.

The FW-LT System is used for cooling: ME LO Cooler, Camshaft LO Cooler, Jacket Water Cooler, and Scavenge Air Coolers. The FW-HT System is used for cooling the cylinder liners, cylinder covers and exhaust valves of the main engine. Freshwater Generator is installed for production of freshwater by utilising the heat in the jacket water-cooling system.

The most obvious way to determine if a vessel has a centralized sea water cooling system would be to identify the components of the system or by reviewing the system drawings.

Sea Water Box coolers

A Box Cooler is a vessel water cooling system. It comprises a U-tube bundle that is fitted in the sea chest on the side of a vessel, saving space in the engine room. The sea chest is equipped with inlet and outlet grids. Cooling sea water enters through the inlet grid and flows along the U-tube bundle to the outlet grid, thus cooling the water inside the tubes. The cooling effect is achieved by the forced circulation of sea water when the vessel is moving or by natural convection when it is stationary.

As Box coolers will be installed within sea chests, they are hard to identify during inspections. As a result, the ships drawings, machinery makers lists, and dry-docking reports and photographs will need to be consulted in order to positively verify whether a ship is fitted with box-coolers. The crew may also need to be consulted as they should be aware if their vessel is fitted with box coolers.

Cold Ironing / Shore Power facilities

While all vessels will have a means of connecting to shore power which is used during dry-docking periods, this question refers specifically to ships with specialized equipment which allows a vessel to connect to shore power easily and safely in port.

Shore power is the process of connecting ships to the port electrical grid to power onboard services, systems, and equipment. This enables ships' diesel generators to be switched off with a resultant reduction in noise and emissions, such as particulate matter, nitrogen oxides, sulphur oxides, carbon oxides, and volatile organic compounds. Cold Ironing, Shore Power, Onshore Power Supply (OPS), Shore Side Electricity (SSE), and AMP (Alternative Marine Power) are all acronyms and terms used to describe shore side power facilities.

☎ +44 (0)2920 446 644 | +86 21 6219 5047 enquiries@idwalmarine.com

When vessels are moored in a port, power is supplied to them. This is done so with the use of special flexible cables that are plugged into an electricity supply board in the port on one end and to the ship's power supply board on the other end. The system requires modifications on the ship to allow for shore power to be imported aboard, and requires installation ashore of special gantry and cables, quick disconnect connections, cable reels, and other equipment to deliver and control the power. The additional equipment to allow shore power to be used will usually be easily identifiable but takes many different forms. The most common indication is the cable reel as seen below:

Dual Air Handling Unit Refrigeration compressors

This question relates to whether a vessel has more than one compressor for the Air Handling system onboard (HVAC, Air conditioning system). Most merchant vessels will have an "Air Handling Room" or "Air Conditioning Unit Room" in the accommodation which will contain the compressors. This space should be inspected, and it should be easy to identify how many compressors are provided. The machinery inventory onboard if provided may also state how many A.H.U. compressors are installed.

☎ +44 (0)2920 446 644 | +86 21 6219 5047 enquiries@idwalmarine.com